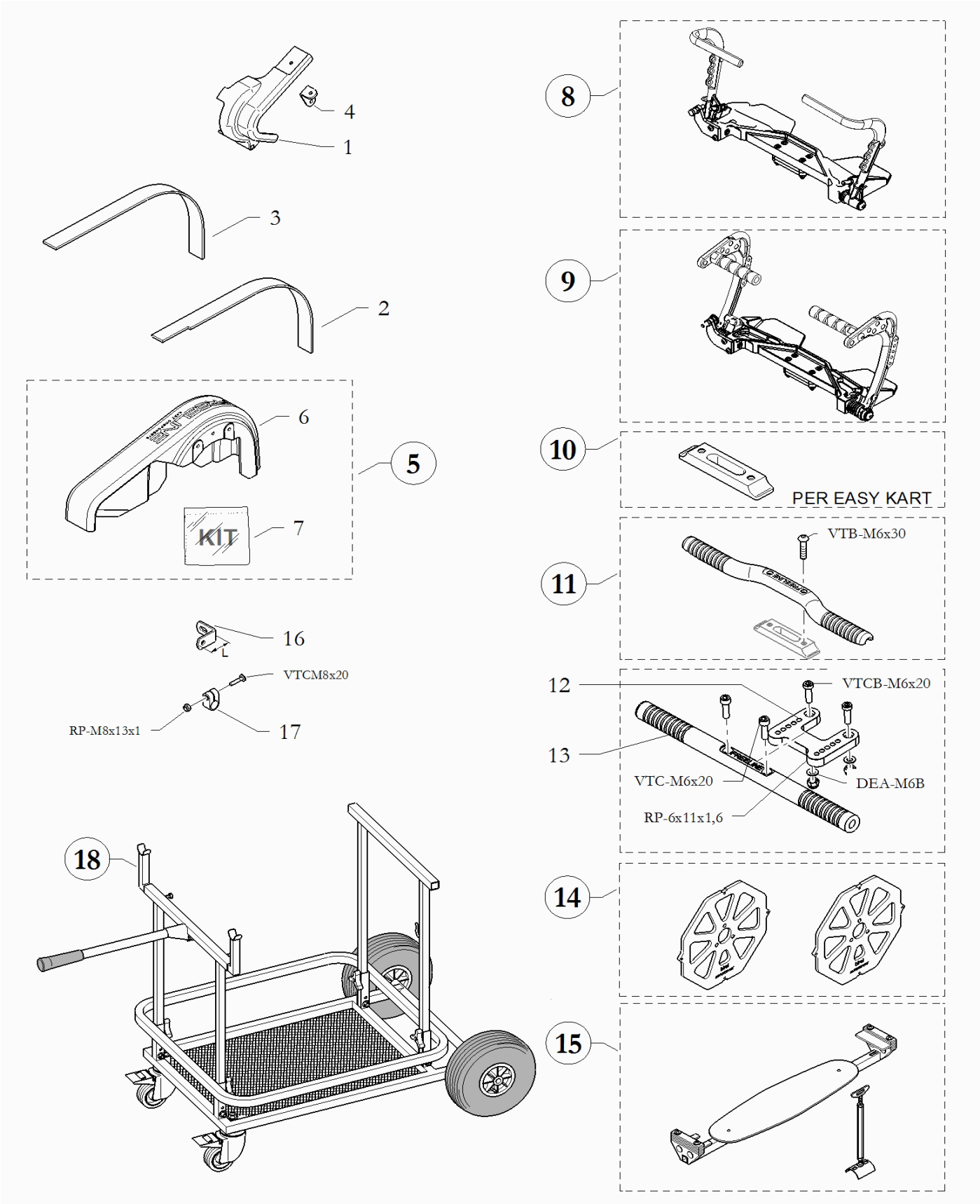
4
1
3
2
6
5
KIT
7
16
VTCM8x20
RP-M8x13x1
17
18
8
9
10
PER EASY KART
11
VTB-M6x30
12
VTCB-M6x20
13
VTC-M6x20
DEA-M6B
RP-6x11x1,6
14
15

ACCESSORIES

POS	CODE	DESCRIPTION	C28-S14	RY30-S14	L28C-Y	B25-X	TIA-Ⅳ	Y30M	希望小売価格（税別）
1	20.4947.18	CARTER FOR CLUTCH COMER 50							2,200
2	20.4956.18	CHAIN GUARD FLAT B25				*			1,500
3	20.9257.18-NE	CHAIN GUARD FLAT			*		*		1,500
4	20.4969.06	HOLDER 20×15×2.5							650
5	10.10765.00	CHAIN GUARD FREE LINE UNIVERSAL,ASSY	*						11,900
5	10.10772.00	CHAIN GUARD FREE LINE S4,ASSY		*				*	11,900
6	20.10094.18-NE	CARTER CHAIN GUARD FREE LINE	*	*				*	8,700
7	10.10097.00	CHAIN GUARD FREE LINE UNIVERSAL FITTING KIT	*						4,400
7	10.10764.00	CHAIN GUARD FREE LINE S4 FITTING KIT		*				*	4,400
8	10.14240.00	ADJUSTABLE PEDALS 2019							51,900
9	10.15721.00	ADJUSTABLE PEDALS HI-TECH, ASSY							51,900
10	20.9132.10-LU	MOUNT FOR ADJUSTABLE FOOTREST							1,300
11	20.11607.10-NE	SHAPED FOOTREST						*	10,300
12	20.15069.10-NE	ADJUSTABLE FOOTREST SUPPORT	*						5,400
13	10.15068.10-NE	LINEAR FOOTREST	*						10,300
14	10.8263.00-NE	SET DISK FOR CONVERGENCE							34,000
15	10.8531.00	SEAT ASSEMBLING TOOL KIT							36,000
16	20.1929.06	HOLDER 20×3×20							650
16	20.3239.06	HOLDER 20×3×30							650
16	20.3242.06	HOLDER 20×3×60							650
16	20.3245.06	HOLDER 20×3×90			*		*		650
16	20.3246.06	HOLDER 20×3×110			*		*		650
17	20.4011.18	CLAMP d.20				*			330
18	10.12948.00	TRACK TROLLEY							76,000