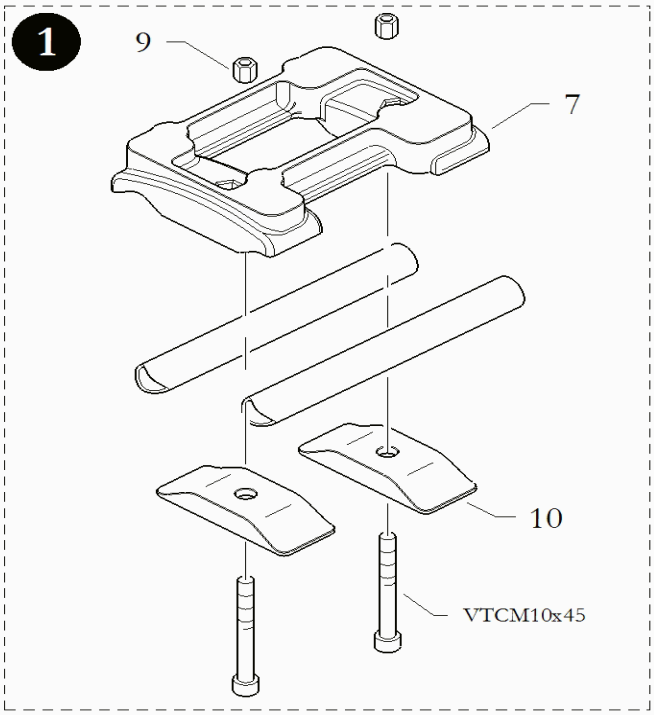
1
9
7
10
VTCM10x45

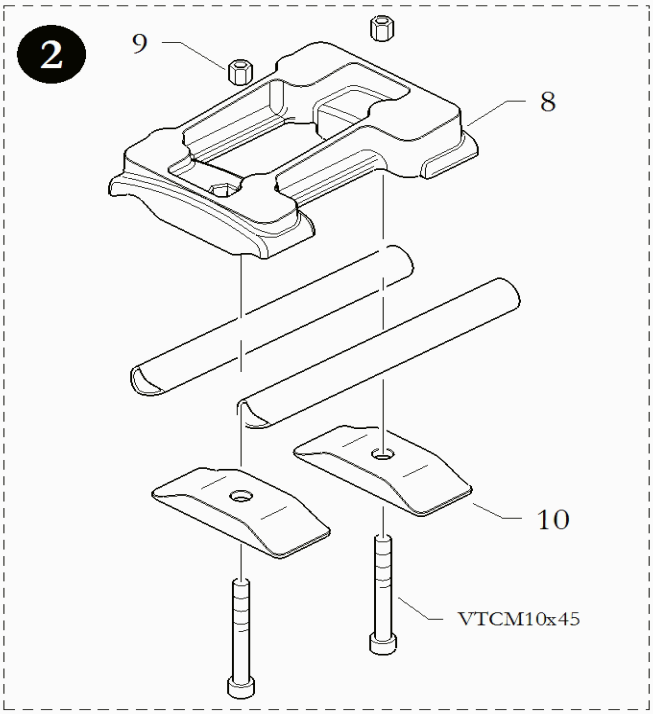
2
9
8
10
VTCM10x45

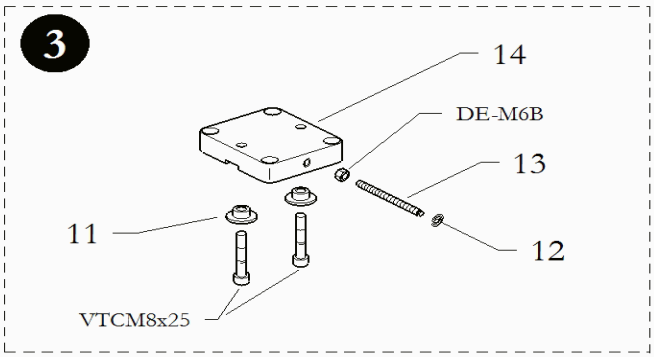
3
14
DE-M6B
13
11
12
VTCM8x25

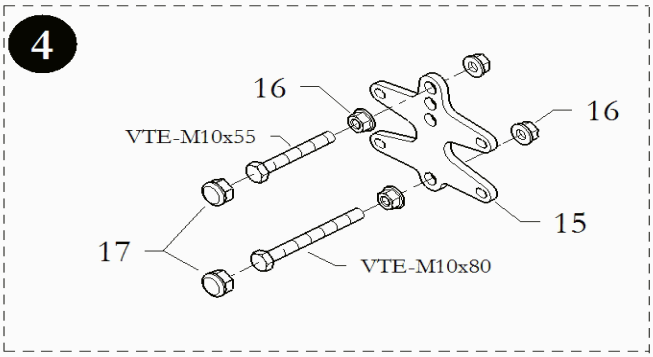
4
16
16
VTE-M10x55
15
17
VTE-M10x80

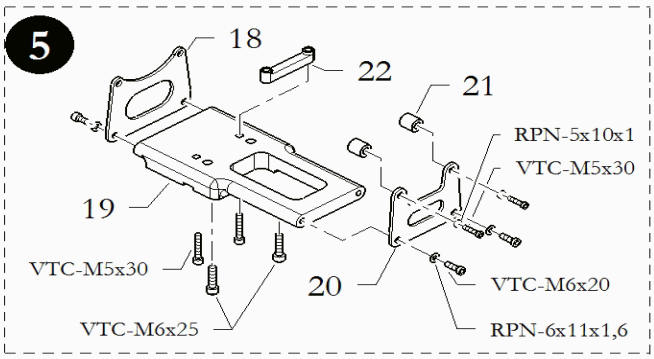
5
18
22
21
RPN-5x10x1
VTC-M5x30
19
VTC-M5x30
20
VTC-M6x20
VTC-M6x25
RPN-6x11x1,6

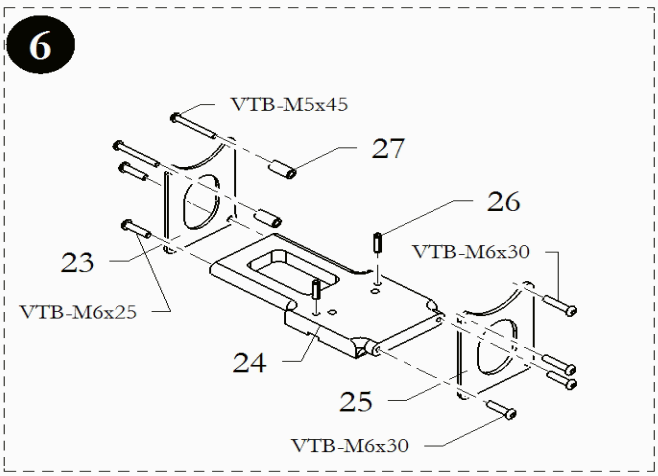
6
VTB-M5x45
27
26
23
VTB-M6x30
VTB-M6x25
24
25
VTB-M6x30

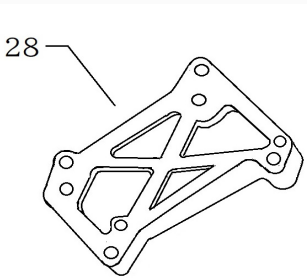
28

ENGINE MOUNTS

POS	CODE	DESCRIPTION	C28-S14	RY30-S14	L28C-Y	B25-X	TIA-Ⅳ	Y30M	希望小売価格（税別）
1	10.9506.00	ENGINE MOUNT FLAT,ASSY							11,300
2	10.9259.00	ENGINE MOUNT INCLINED,ASSY	*	*	*		*	*	11,300
3	10.12891.00	ENGINE MOUNT C50.ASSY				*			7,100
4	10.11687.00	ENGINE LOCK ASSEMBLY HQ KZ							3,800
5	10.11350.00	ENGINE MOUNT HONDA GX35 ASSEMBLY				*			14,100
6	10.14089.00	ENGINE MOUNT BB50 N61E ASSEMBLY				*			14,100
7	10.9124.00	ENGINE MOUNT FLAT							7,000
8	10.9181.00.	ENGINE MOUNT INCLINED	*	*	*		*	*	7,000
9	20.1488.06	ENGINE MOUNT NUT	*	*	*		*	*	310
10	20.9206.06	MOUNT CLAMP,STEEL	*	*	*		*	*	2,000
11	20.10363.06	BUSHING ENGINE MOUNT B25				*			650
14	20.4942.10	ENGINE MOUNT C50				*			6,100
15	20.11686.06	ENZINE LOCK KZ							3,300
16	40.0637.00	NUT FOR REAR BUMPER M10							220
17	20.3201.18	KNOB LOCK ENGINE MOUNT	*	*	*		*	*	220
18	20.11909.06	ENGINE HONDA GX35 BR.CLUTCH SIDE				*			1,100
19	20.11908.10	ENGINE HONDA GX35				*			11,400
20	20.11348.06	ENGINE HOLDER GX35				*			1,100
21	20.11349.10	SPACER BUSHING 6*13.6*14.5				*			170
28	20.10727.10	ENGINE MOUNT YAMAHA 20mm							8,700