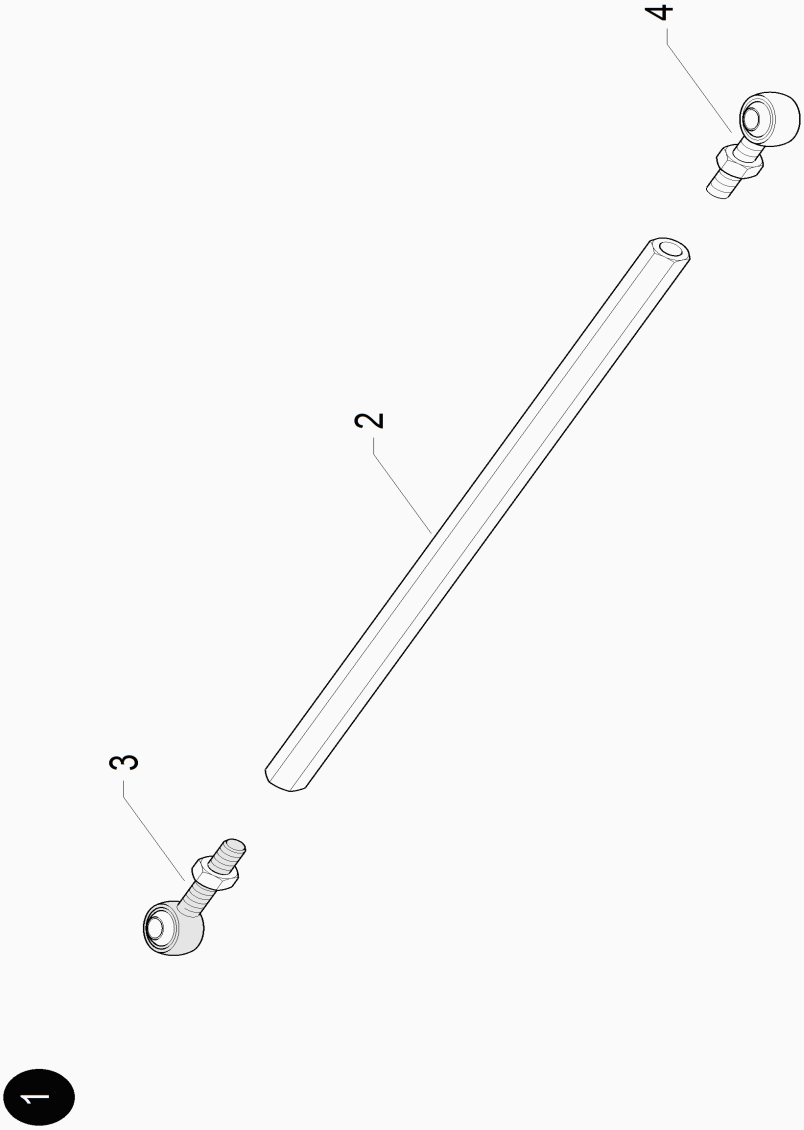
1
3
2
4

STEERING TIE RODS

POS	CODE	DESCRIPTION	C28-S14	RY30-S14	L28C-Y	B25-X	TIA-Ⅳ	Y30M	希望小売価格（税別）
1	10.5162.00-NE	TIE ROD ASSY. 225 ALUMINUM	*						7,600
1	10.5163.00-NE	TIE ROD ASSY. 235 ALUMINUM							7,600
1	10.5164.00-NE	TIE ROD ASSY. 245 ALUMINUM							7,600
1	10.5165.00-NE	TIE ROD ASSY. 255 ALUMINUM		*			*	*	7,600
1	10.5166.00-NE	TIE ROD ASSY. 265 ALUMINUM		*				*	7,600
1	10.5857.00-NE	TIE ROD ASSY. 215 ALUMINUM	*		*				7,600
1	10.5881.00-NE	TIE ROD ASSY. 195 ALUMINUM				*			7,600
1	10.5882.00-NE	TIE ROD ASSY. 205 ALUMINUM							7,600
1	10.6486.00-NE	TIE ROD ASSY. 185 ALUMINUM				*			7,600
2	20.3507.10-NE	TIE ROD 225 ALUMINUM	*						3,300
2	20.3508.10-NE	TIE ROD 235 ALUMINUM							3,300
2	20.3509.10-NE	TIE ROD 245 ALUMINUM							3,300
2	20.3510.10-NE	TIE ROD 255 ALUMINUM		*			*	*	3,300
2	20.3511.10-NE	TIE ROD 265 ALUMINUM		*				*	3,300
2	20.4036.10-NE	TIE ROD 215 ALUMINUM	*		*				3,300
2	20.4100.10-NE	TIE ROD 195 ALUMINUM				*			3,300
2	20.7056.10-NE	TIE ROD 185 ALUMINUM				*			3,300
3	40.2439.00	BALL JOINT M M8 R	*	*	*	*	*	*	2,200
4	40.3484.00	BALL JOINT M M8 L	*	*	*	*	*	*	2,200