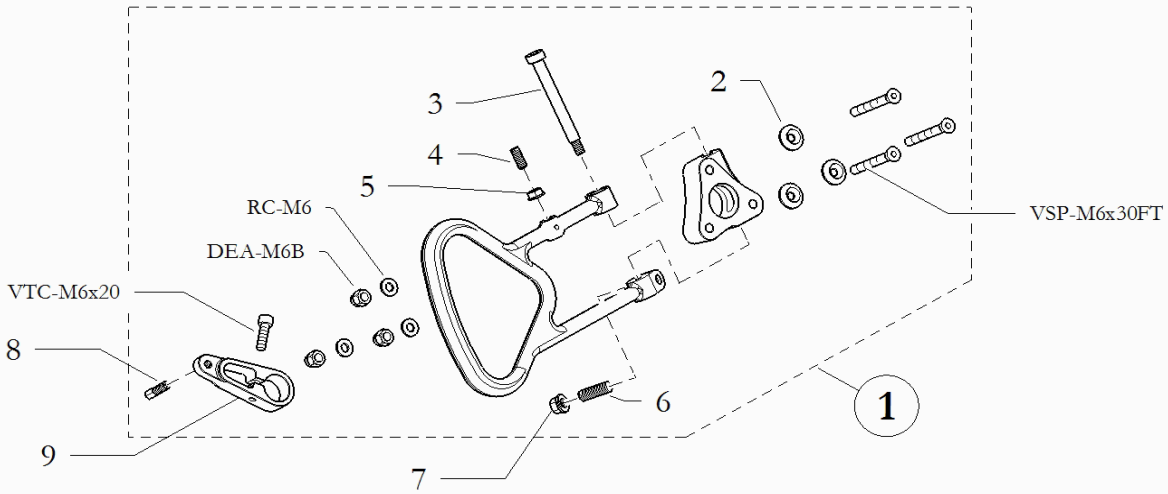
3
2
4
5
RC-M6
DEA-M6B
VTC-M6x20
8
9
7
6
VSP-M6x30FT
1

CLUTCH LEVER

Gr.m BIR080A

POS	CODE	DESCRIPTION	C28-S14	RY30-S14	L28C-Y	B25-X	TIA-Ⅳ	Y30M	希望小売価格（税別）
1	10.11146.00-NE	CLUTCH LEVER HQ,ASSY							32,400
2	20.3615.10-LU	WASHER COUNYERSUNK M6							650
3	40.11025.00	SCREW M6*8*65							2,200
4	40.11143.00	DOWEL 6*16							110
5	40.6349.00	LOCK NUT M6							110
6	40.11144.00	DOWEL 8*25							110
7	40.6257.00	FLANGED LOCK NUT M8							170
8	40.12792.00	ADJUSTER HEXAGONAL M6 10x24 WITH A NUT							480
9	40.12792.00	CABLE HOUSING GUIDE CLUTCH							7,200